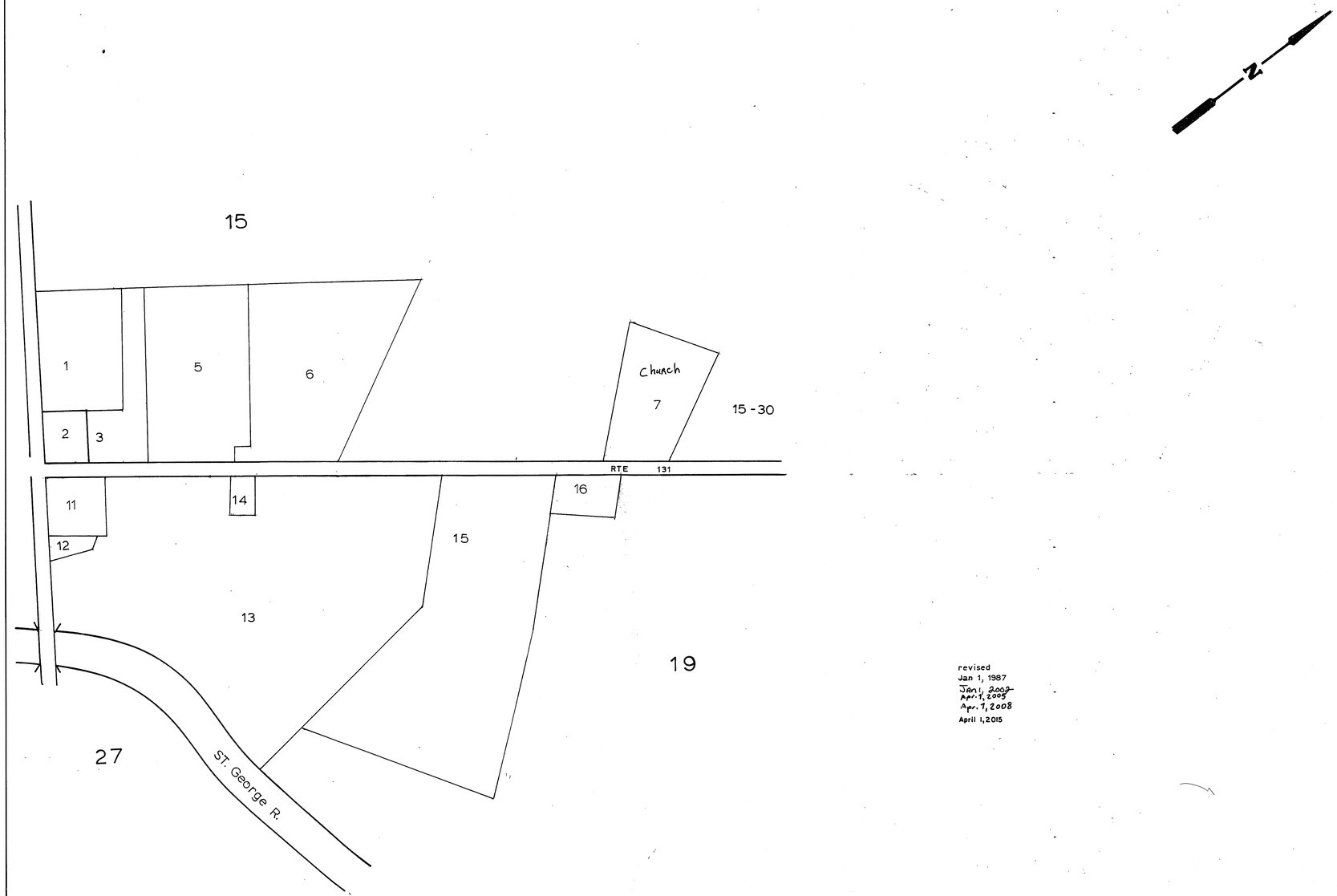

revised
Jan 1, 1987
~~Jan 1, 2003~~
~~Apr. 1, 2005~~
~~Apr. 1, 2008~~
April 1, 2015

PREPARED BY
D.H.BURKE
APPLETON, ME.

1977

LEGEND
ADJACENT SHEET NO. 5
COMMON OWNERSHIP
SCALED DIMENSION ±

APPLETON

MAINE

SCALE IN FEET
0 100 200